# INSTALLATION GUIDE

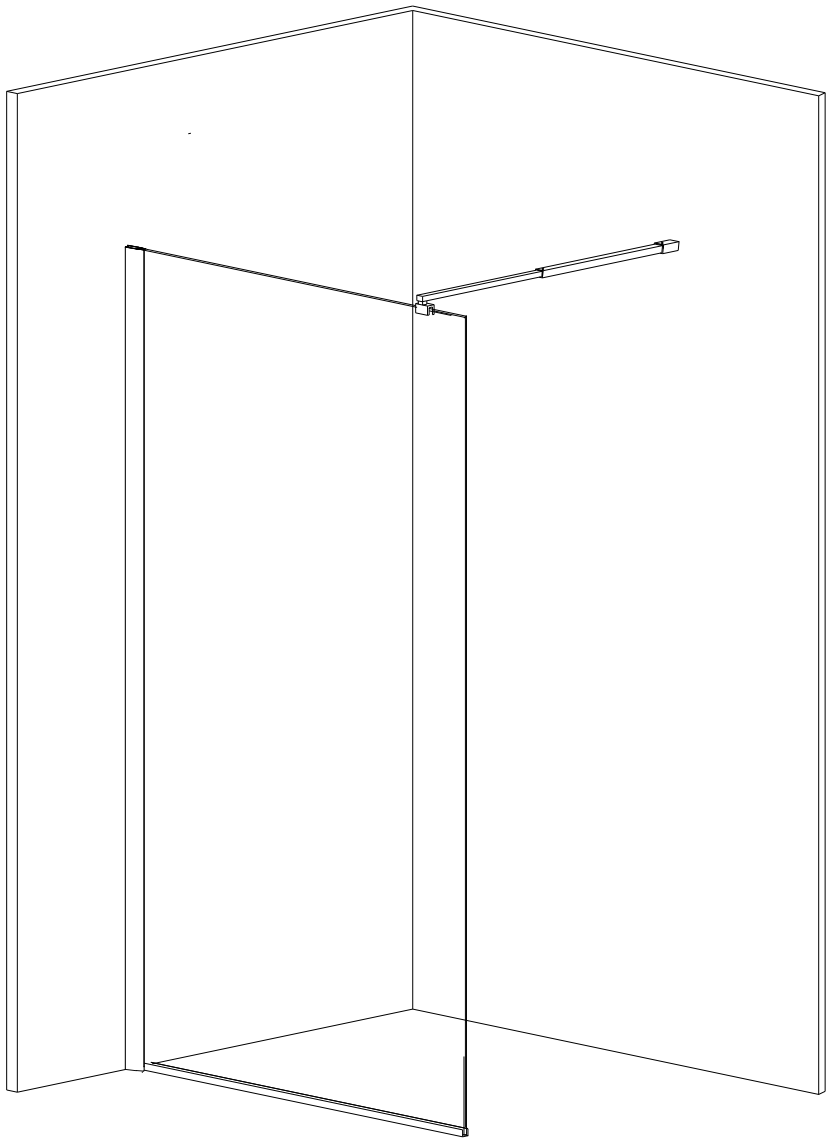

# Product Breakdown

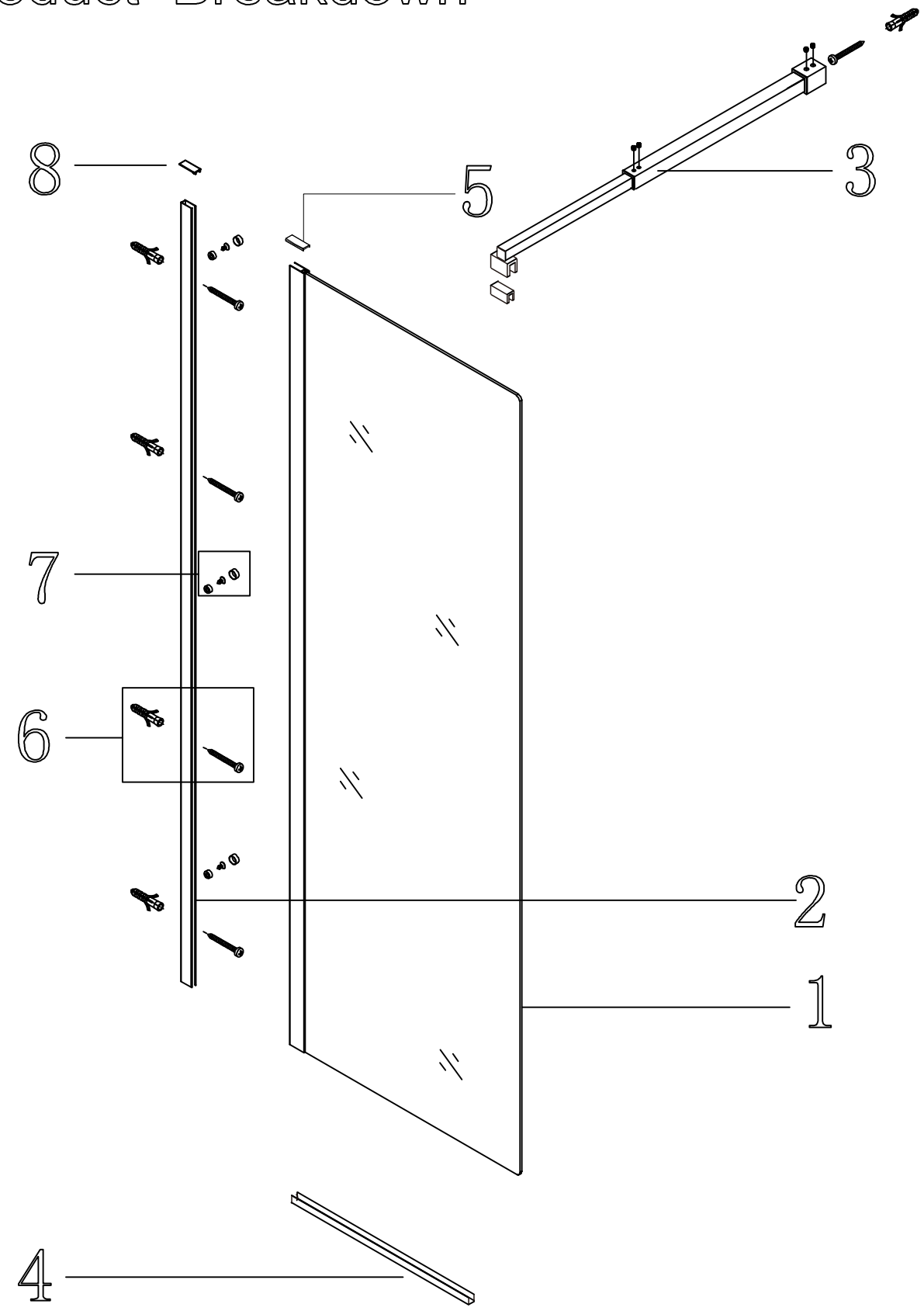

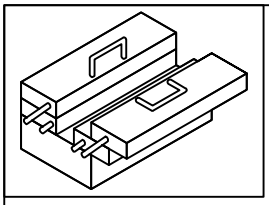

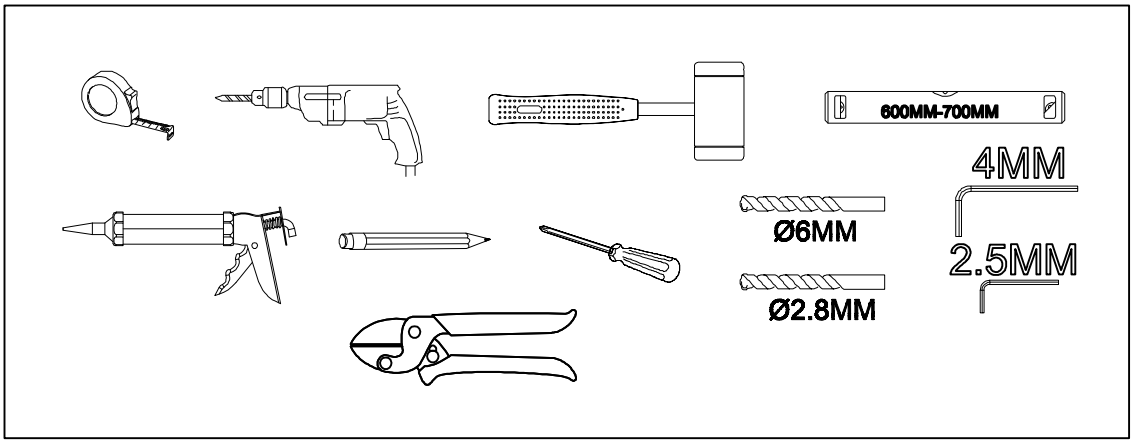
600MM-700MM
4MM
Ø6MM
2.5MM
Ø2.8MM

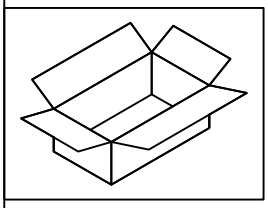

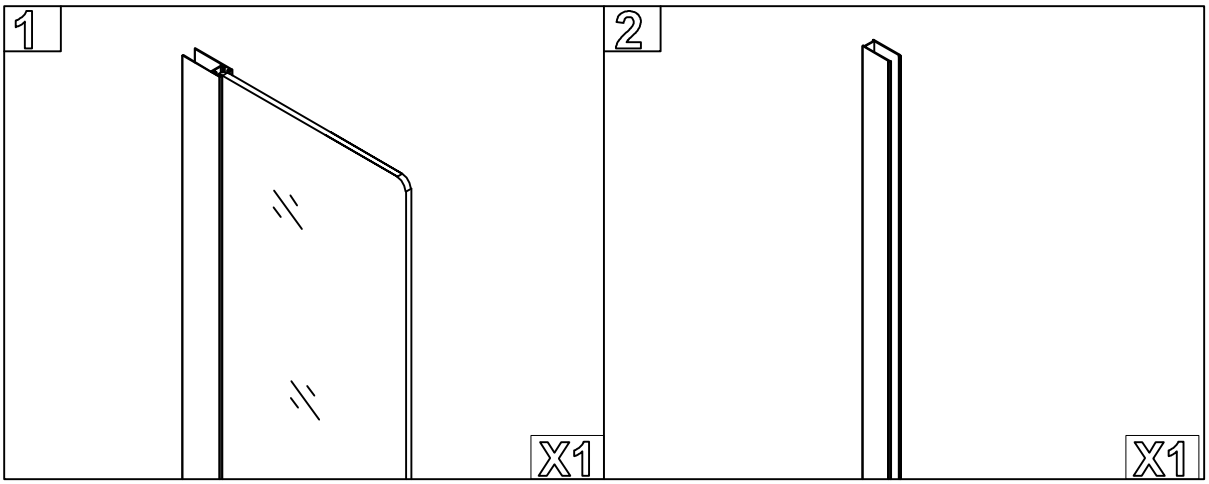
1
X1
2
X1

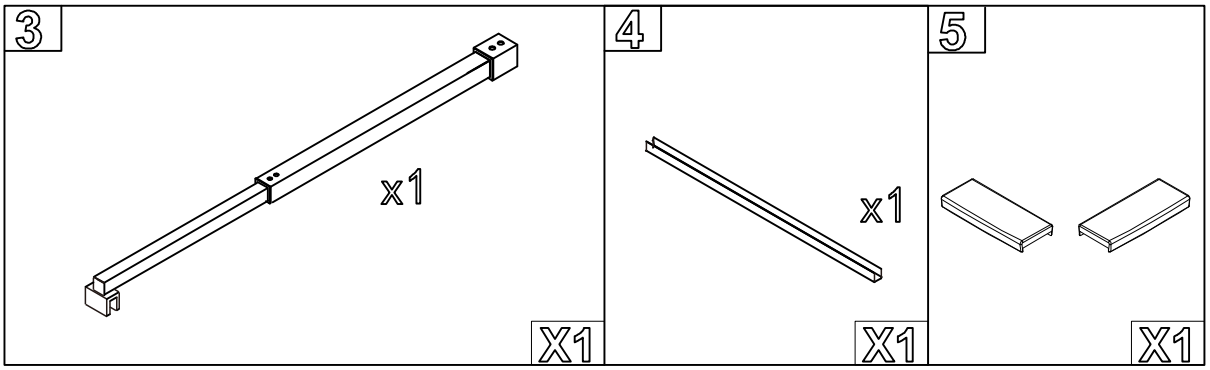
3
x1
X1
4
x1
X1
5
X1

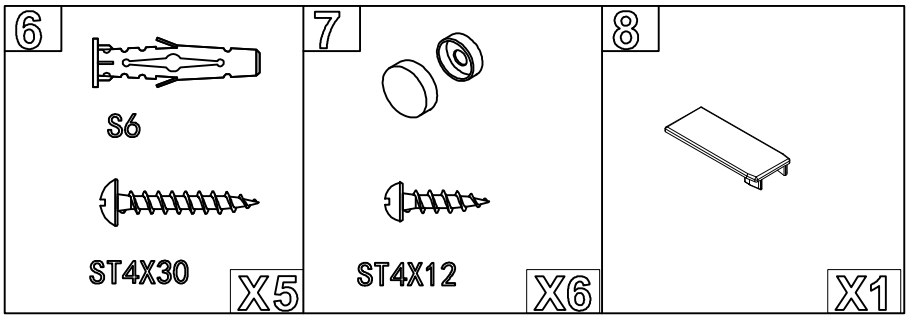
6
S6
ST4X30
X5
7
ST4X12
X6
8
X1

1

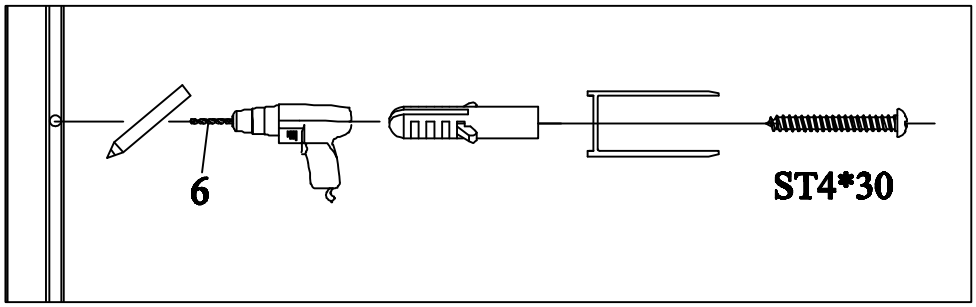


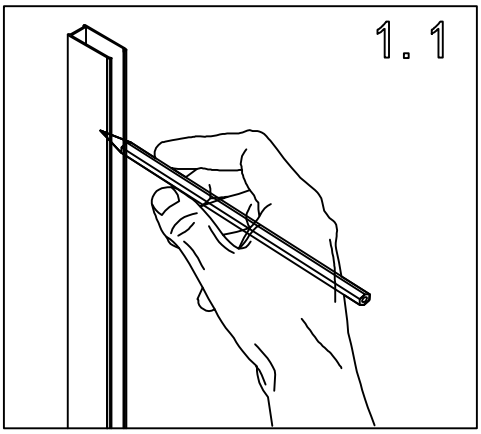


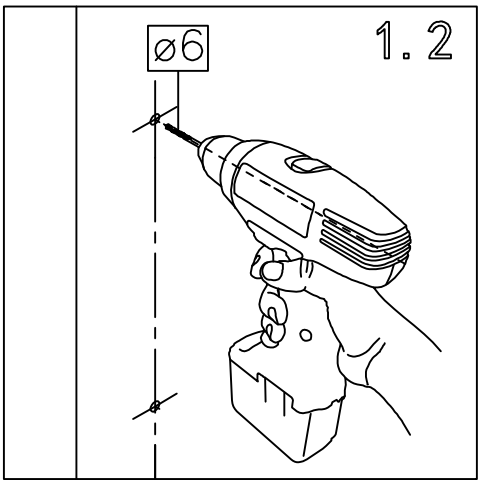


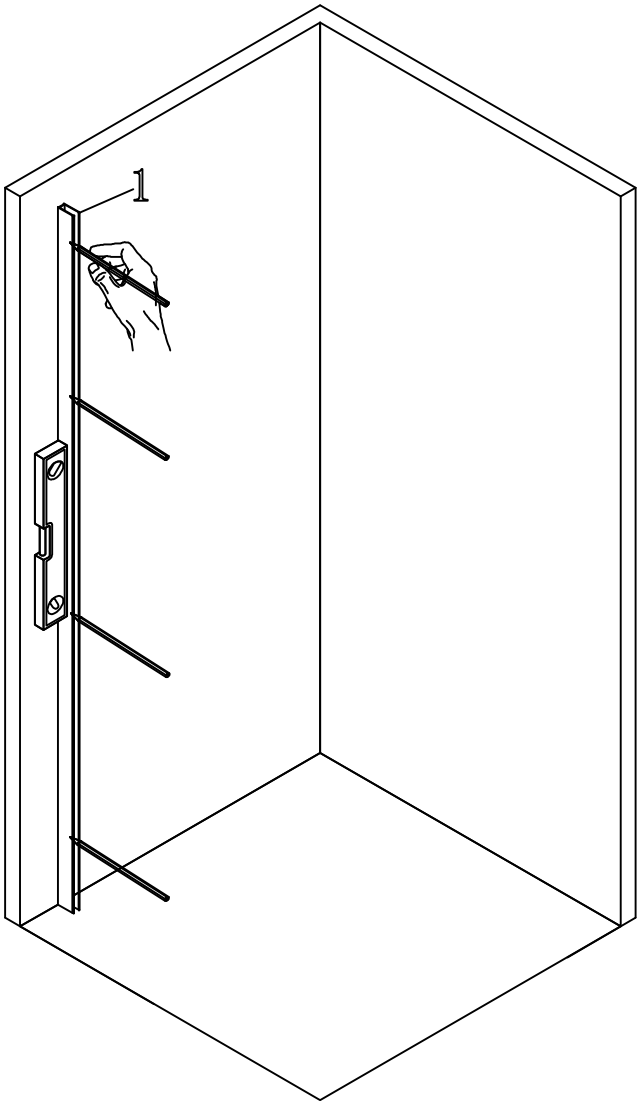


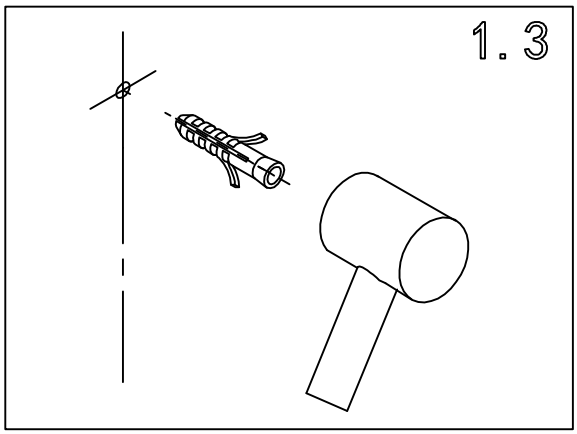


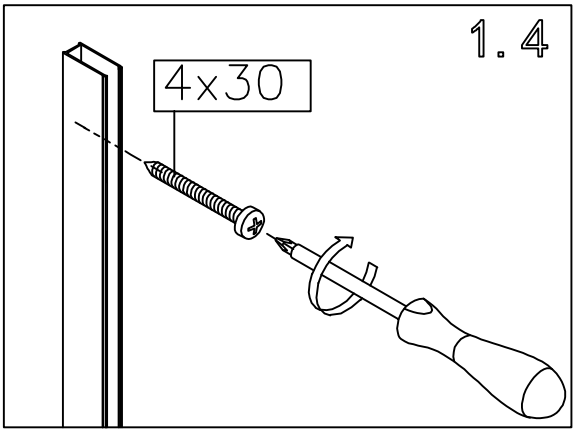

## 2

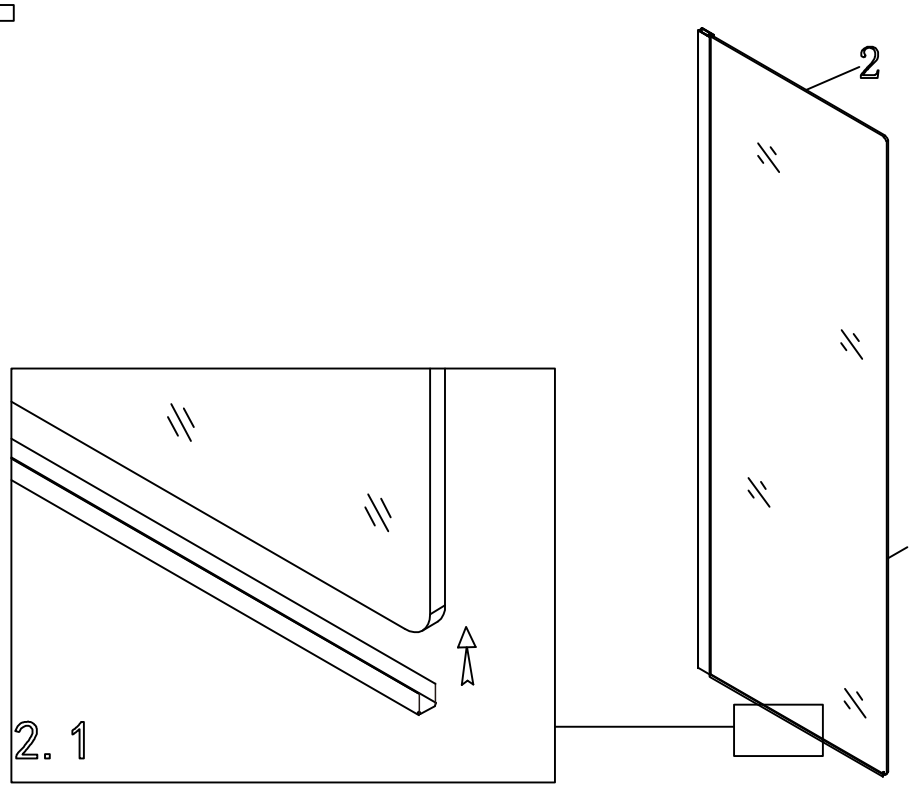


## 3

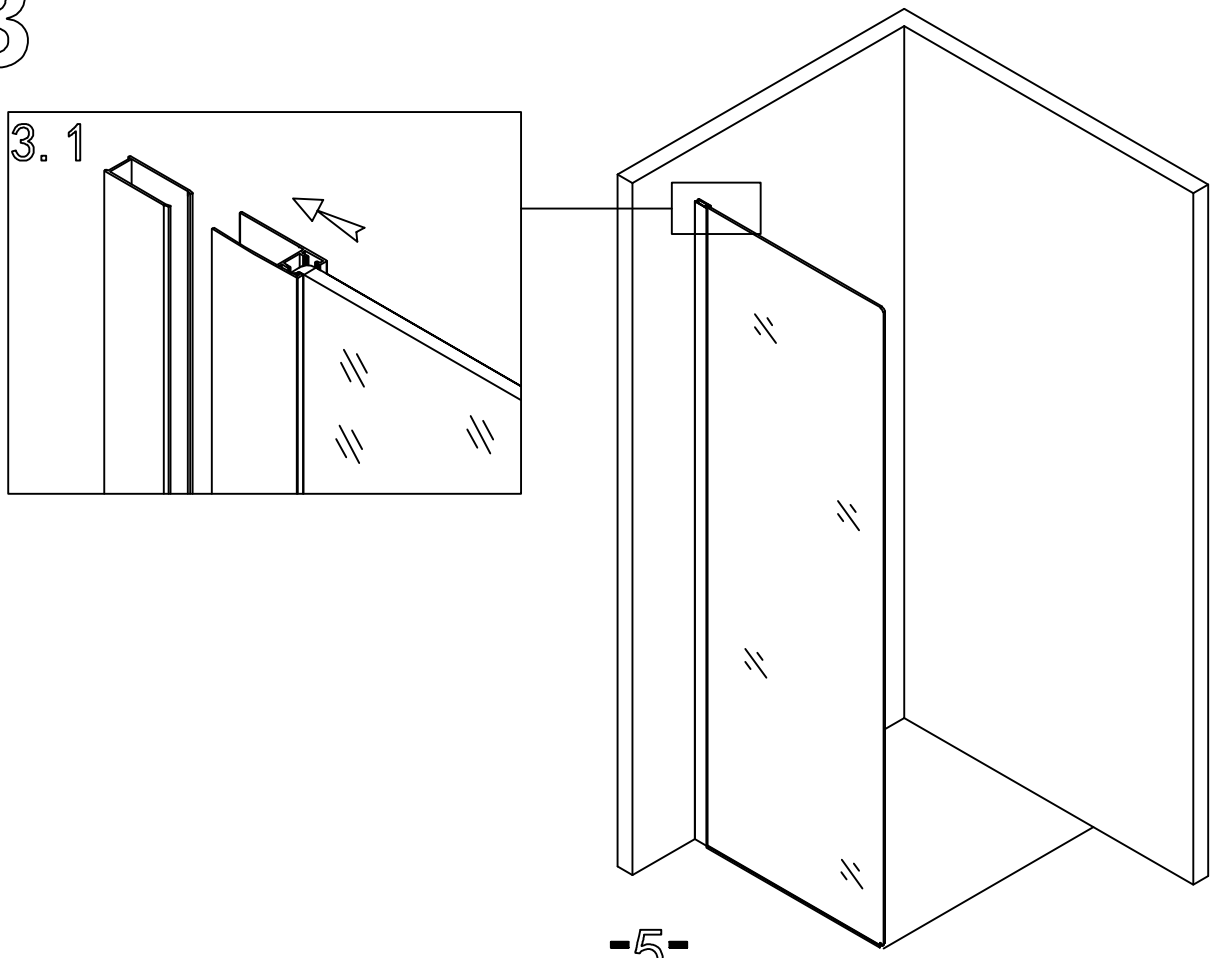

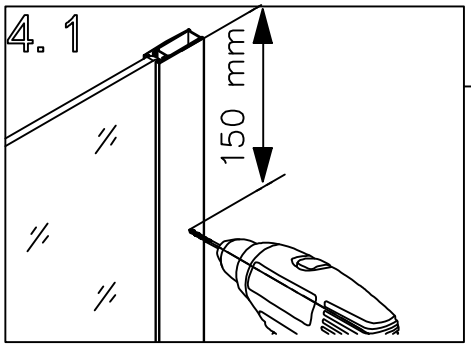
4. 1
150 mm

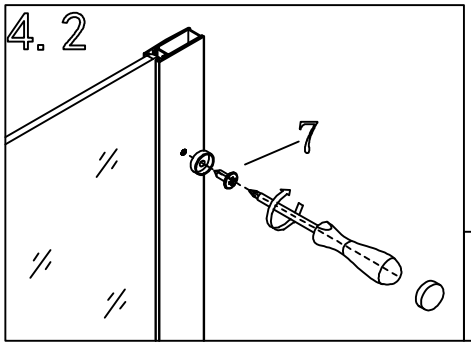
4. 2
7

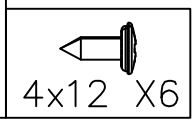
4x12 X6

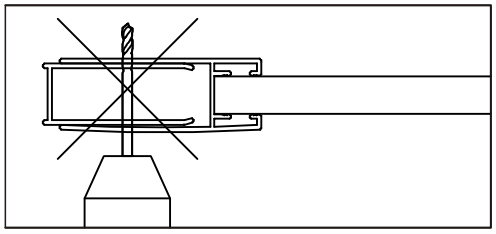

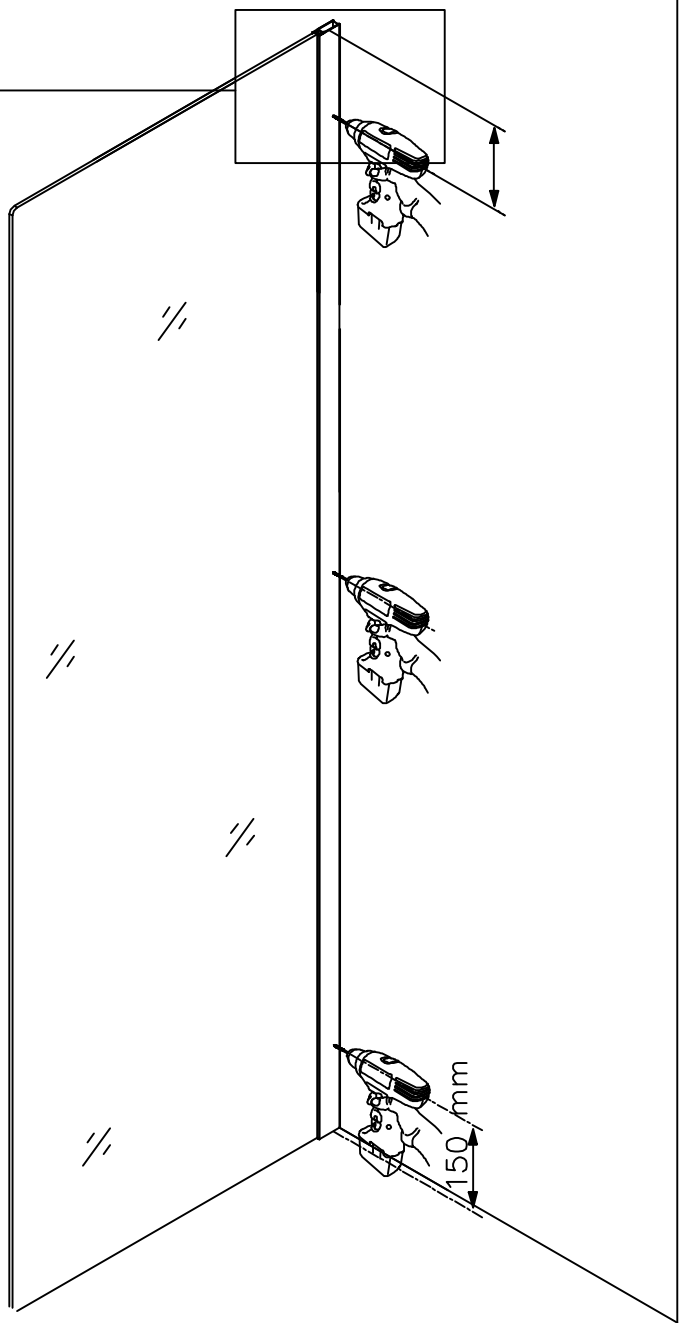
150 mm

5

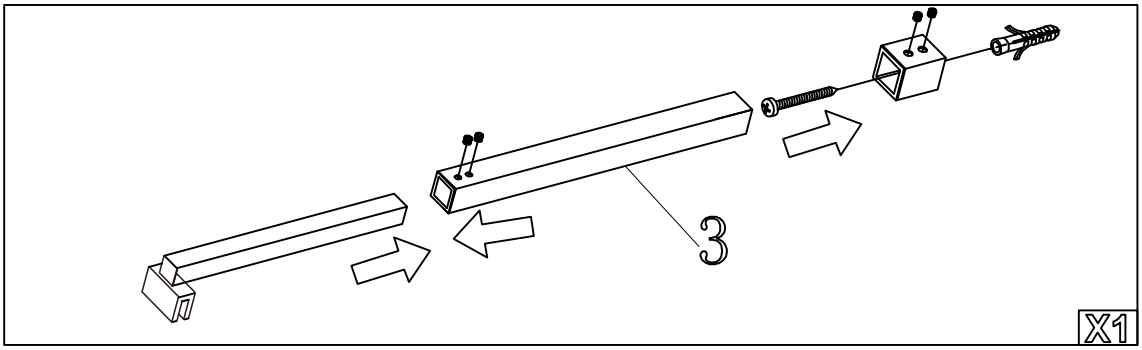


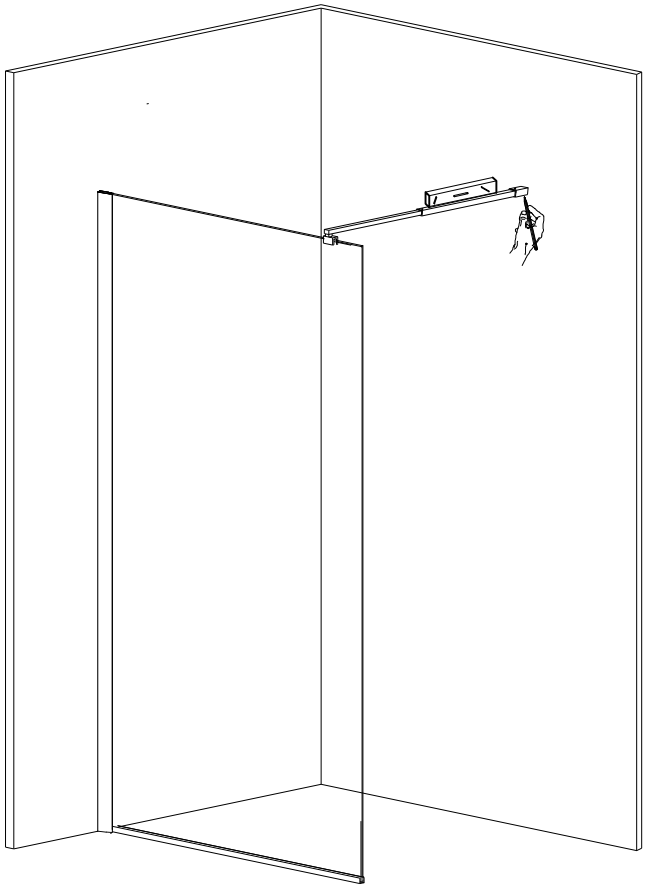

5.1

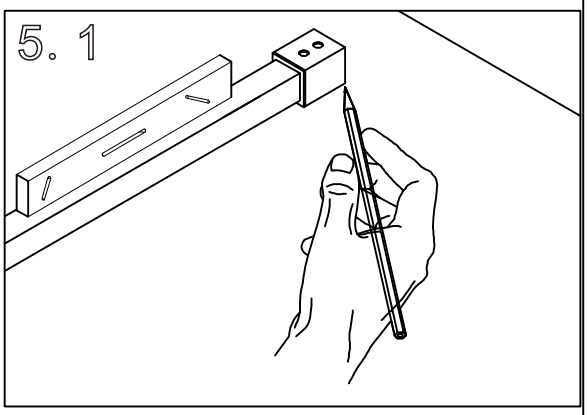

5.2

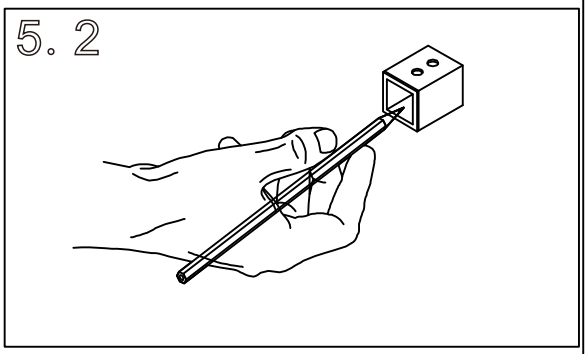

5.3

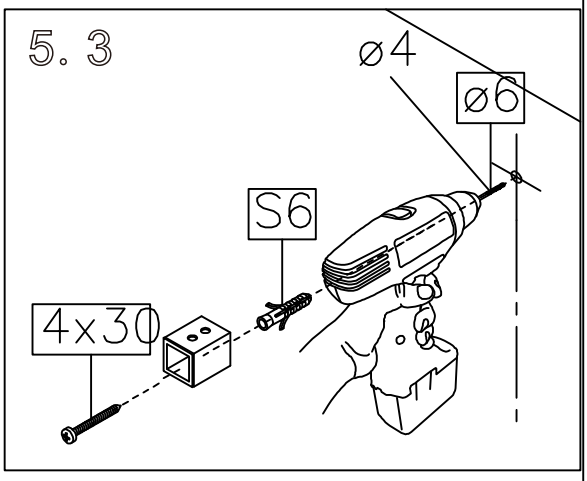


5.5

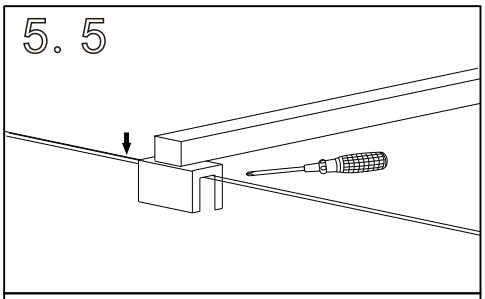

5.6

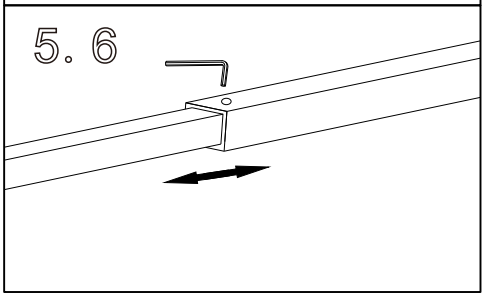

5.4

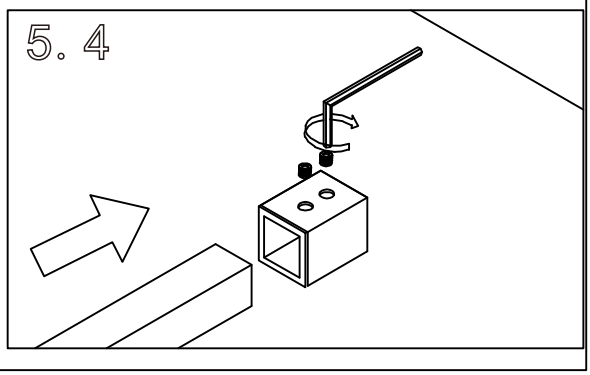

# 7

